ZIMMER Since 1958 Automation

High-Quality Materials for Maximum Safety

Version 2 – Level Probe with stainless steel housing GVA
Electric interface through a factory mounted cord with numbered wires.
Case moduled. Protection class IP 65.

Connection cable with the length of 3m or as required

Electrode length available 5 to 4000mm (please specify with your order)

1 - 7 electrodes

For heavy-duty

All parts which may touch the medium are made from physioligically harmless materials (with Polyolefin coating)

For conductive filling level acquisition

Technical data

Mounting method:	Thread	**Probe-head material:**	V2A / 1.4305 Cover and Cable gland brass, nickel-plated
Mounting orientation:	any	**Electrode material:**	V4A / 1.4571 (optional HAC-C4; Titanium)
Case temperature:	max. +110°C	**Coating:**	Kynar (optional Polyolifin)
Media temperature:	max. +120°C (Polyolefin max. 100°C)	**Sealing ring:**	FPM
Media pressure:	max. 10 bar		

Size	Electrodes	Standard-Model
1/2“	1	GVAE - 1V**K**2
1/2“	1 (2)*	GVAE - 1V**K**2R
1/2“	2	GVAE - 2V**K**2
1“	2	GVAG - 2V**K**2
1“	3	GVAG - 3V**K**2
1“	4	GVAG - 4V**K**2

Size	Electrodes	Standard-Model
1 1/2“	2	GVAI - 2V**K**2
1 1/2“	3	GVAI - 3V**K**2
1 1/2“	4	GVAI - 4V**K**2
1 1/2“	5	GVAI - 5V**K**2
1 1/2“	6	GVAI - 6V**K**2
1 1/2“	7	GVAI - 7V**K**2

⚠ To order the Polyolifin-coated version insert „ **P**“ instead of **K**“ – e.g. „GVAE - 1V **P**1“.

* Single pole probe with the reference connection tied to the mounting for use in electrical conductive vessels, „ functionality is the very same as for a bipolar probe.

Dimensions

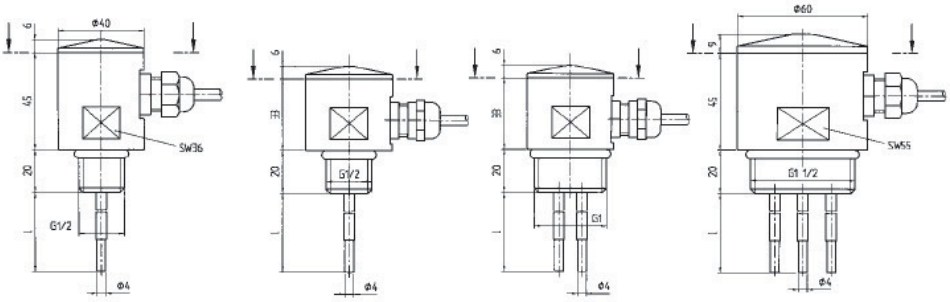

Options

Mounting bracket	Material V2A / 1.4301
Cable gland	Material V2A / 1.4301
Junction cable	with numeric labeled wires

Ehestorfer
Dorfstraße 17a
21224 Rosengarten

☎+49 (0) 7971500 info@zimmer-automation.com